NOTE: UNLESS OTHERWISE SPECIFIED

1. ALL CAPACITANCE VALUES ARE IN MICROFARADS.
2. ALL RESISTANCE VALUES ARE IN OHMS, ± 5%, 1/4 W.

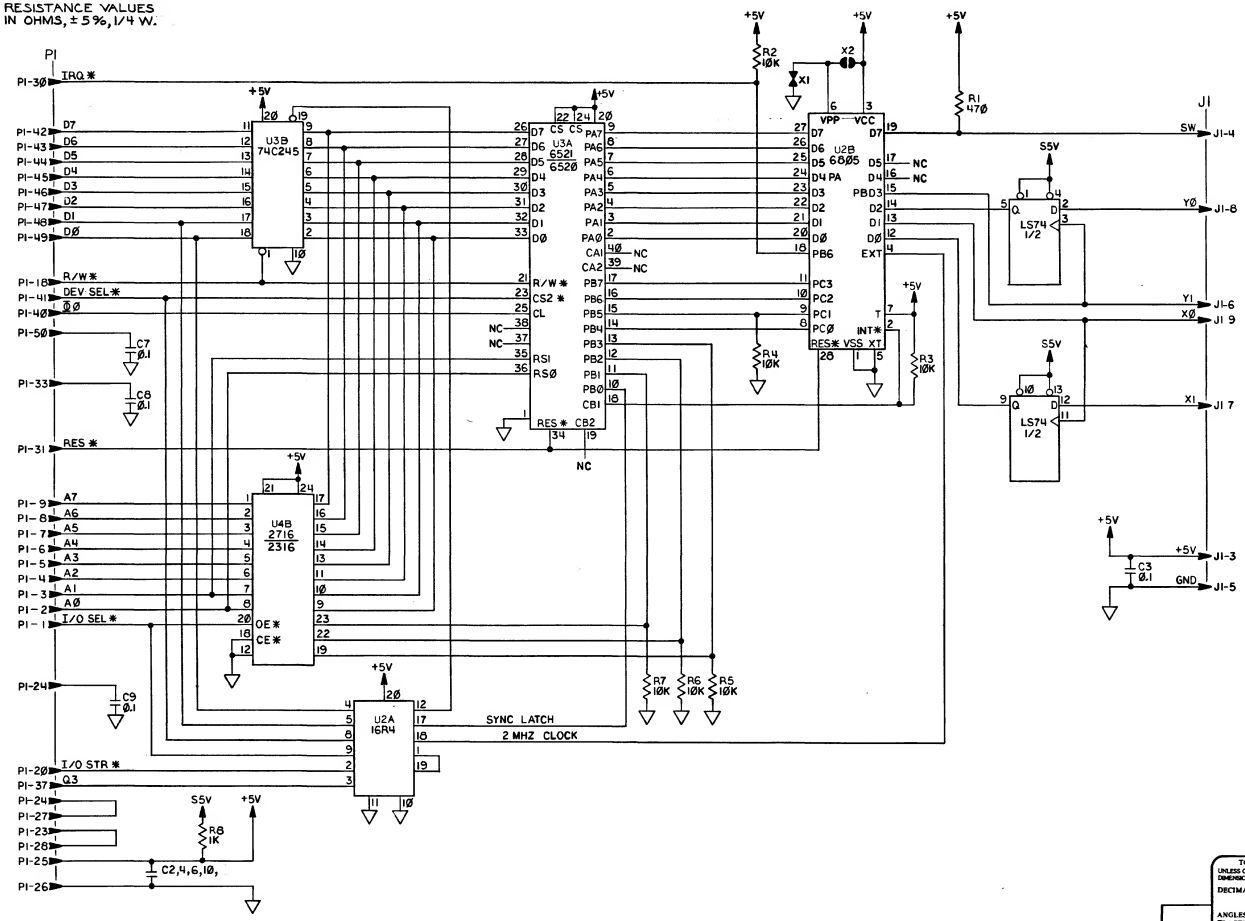

REV.	ZONE	ECO #	REVISION	APPD
A		A933	INITIAL RELEASE	

ITEM	QTY	PART NUMBER	DESCRIPTION

TOLERANCES UNLESS OTHERWISE SPECIFIED DIMENSIONS ARE IN INCHES.
DECIMALS .X ± .XX ± .XXX ± ANGLES .XX ± FRACTIONS ± DIMENSIONS IN PARENTHESIS ARE IN MILLIMETERS.

DRAWN BY S. Baird DATE 11-83
CHECKED BY Dave North DATE 12/4/83
APPROVED BY [illegible] DATE [illegible]
RELEASED BY Chas Brown DATE 1-10-84

MATERIAL: ——
NEXT ASSY. FINISH: ——

apple computer inc.

TITLE SCHEMATIC, A// MOUSE BOARD

SIZE D DRAWING NUMBER 050-0101-A

SCALE: —— SHEET 1 OF 1

THIRD ANGLE PROJECTION DO NOT SCALE DRAWING

DRAWING NUMBER 050-0101-A SH 1 OF 1